Monsanto

PHOTO-DARLINGTON OPTO-ISOLATOR

4N29 4N30 4N31 4N32 4N33

PRODUCT DESCRIPTION

The 4N29, 4N30, 4N31, 4N32 and 4N33 have a gallium arsenide infrared emitter optically coupled to a silicon planar photo-darlington. Each unit is sealed in a 6-lead plastic DIP package.

PACKAGE DIMENSIONS

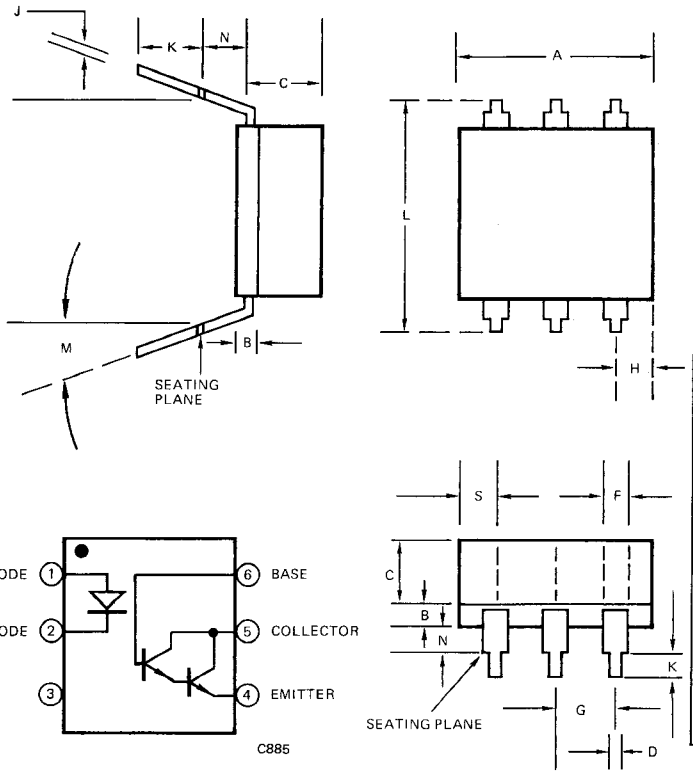

DIM.	MILLIMETERS MIN.	MILLIMETERS MAX.	INCHES MIN.	INCHES MAX.
A	8.38	8.89	0.330	0.350
B	1.40	1.65	0.055	0.065
C	2.92	3.18	0.115	0.125
D	0.41	0.51	0.016	0.020
F	1.14	1.40	0.045	0.055
G	2.54 Basic		0.100 Basic	
H	1.57	1.83	0.062	0.072
J	0.23	0.28	0.009	0.011
K	2.54	3.30	0.100	0.130
L	7.37	7.87	0.290	0.310
M	—	5°	—	5°
N	—	1.27	—	0.050

FEATURES & APPLICATIONS

- Fast operate time — 10 μs
- High isolation resistance — $10^{11}\ \Omega$
- High dielectric strength, input to output — 2500 V min. 4N29, 4N32; 1500 V min. 4N30, 4N31, 4N33
- Low coupling capacitance — 1.0 pF
- Convenient package — plastic dual-in-line
- Long lifetime, solid state reliability
- Low weight — 0.4 grams

ABSOLUTE MAXIMUM RATINGS T_A = 25°C (Unless otherwise specified)

*Storage Temperature . . . . . -55°C to 150°C
*Operating Temperature at Junction . . . . . -55°C to 100°C
*Lead Soldering time @ 260°C . . . . . 10 seconds
*Total power dissipation @ 25°C ambient . . . . . 250 mW
*Derate linearly from 25°C . . . . . 3.3 mW/°C

LED (GaAs Diode)
*Power dissipation @ 25°C ambient . . . . . 150 mW
*Derate linearly from 55°C . . . . . 2 mW/°C
*Continuous forward current . . . . . 80 mA
Reverse current . . . . . 10 mA
*Peak forward current (300 μsec pulse, 330 pps) . . 3.0 A

DETECTOR (Silicon Photo Darlington Transistor)
*Power dissipation @ 25°C ambient . . . . . 150 mW
*Derate linearly from 25°C . . . . . 2.0 mW/°C
*Collector-emitter breakdown voltage (BV_{CEO}) . . . . 30 V
*Collector-base breakdown voltage (BV_{CBO}) . . . . . 50 V
Emitter-base breakdown voltage (BV_{EBO}) . . . . . 8.0 V
*Emitter-collector breakdown voltage (BV_{ECO}) . . . . . 5 V

*Indicated JEDEC Registered data.

ELECTRO-OPTICAL CHARACTERISTICS (25°C Free Air Temperature Unless Otherwise Specified)

CHARACTERISTIC	SYMBOL	MIN.	TYP.	MAX.	UNIT	TEST CONDITION
LED CHARACTERISTICS (T_A = 25°C unless otherwise noted)						
*Reverse leakage current	I_R		0.05	100	μA	V_R = 3.0 V
*Forward voltage	V_F		1.2	1.5	Volts	I_F = 50 mA
Capacitance	C		150		pF	V_R = 0 V, f = 1.0 MHz
PHOTOTRANSISTOR CHARACTERISTICS (T_A = 25°C and I_F = 0 unless otherwise noted)						
*Collector-emitter dark current	I_{CEO}			100	nA	V_{CE} = 10 V, base open
*Collector-base breakdown voltage	BV_{CBO}	30			Volts	I_C = 100 μA, I_E = 0
*Collector-emitter breakdown voltage	BV_{CEO}	30			Volts	I_C = 100 μA, I_B = 0
*Emitter-collector breakdown voltage	BV_{ECO}	5.0			Volts	I_E = 100 μA, I_B = 0
DC current gain	h_{FE}		5000			V_{CE} = 5.0 V, I_C = 500 μA
COUPLED CHARACTERISTICS (T_A = 25°C unless otherwise noted)						
*Collector output current (1)						
4N32, 4N33	I_C	50			mA	V_{CE} = 10 V, I_F = 10 mA, I_B = 0
4N29, 4N30		10			mA	V_{CE} = 10 V, I_F = 10 mA, I_B = 0
4N31		5.0			mA	V_{CE} = 10 V, I_F = 10 mA, I_B = 0
*Isolation voltage (2)						
4N29, 4N32	V_{ISO}	2500			VDC	
4N30, 4N31, 4N33		1500			VDC	
Isolation Resistance (2)	R_{ISO}		10^{11}		Ohms	V = 500 VDC
*Collector-emitter saturation voltage (1)	$V_{CE(SAT)}$					
4N31				1.2	Volts	I_C = 2.0 mA, I_F = 8.0 mA
4N29, 4N30, 4N32, 4N33				1.0	Volts	I_C = 2.0 mA, I_F = 8.0 mA
Isolation capacitance (2)			0.8		pF	V = 0, f = 1.0 MHz
Bandwidth (3)			30		kHz	
SWITCHING CHARACTERISTICS (Figures 2 and 4)						
Turn-on time	t_{ON}		0.6	5.0	μs	I_C = 50 mA, I_F = 200 mA, V_{CC} = 10 V
Turn-off time						
4N29, 4N30, 4N31	t_{OFF}		17	40	μs	I_C = 50 mA, I_F = 200 mA,
4N32, 4N33			45	100		V_{CC} = 10 V (Fig. 2)

*Indicates JEDEC Registered Data.
(1) Pulse test: pulse width = 300 μs, duty cycle ≤ 2.0%
(2) For this test LED pins 1 and 2 are common and phototransistor pins 4, 5 and 6 are common.
(3) I_F adjusted to yield I_C = 2.0 mA and ic = 0.7 mA RMS.
(4) t_d and t_r are inversely proportional to the amplitude of I_F; t_s and t_f are not significantly affected by I_F.

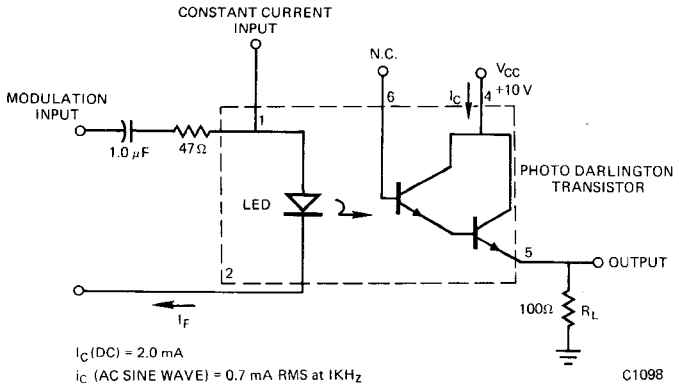

FREQUENCY RESPONSE TEST CIRCUIT

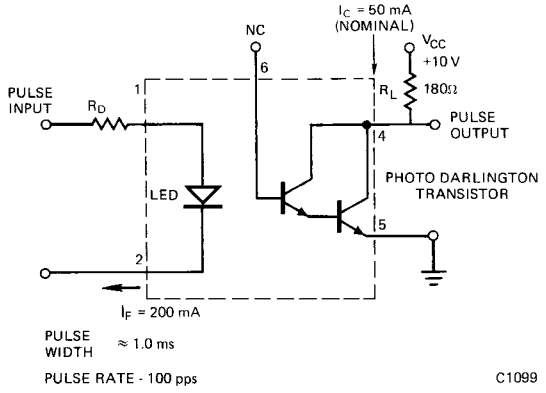

SWITCHING TIME TEST CIRCUIT

APPLICATION INFORMATION

LATCH

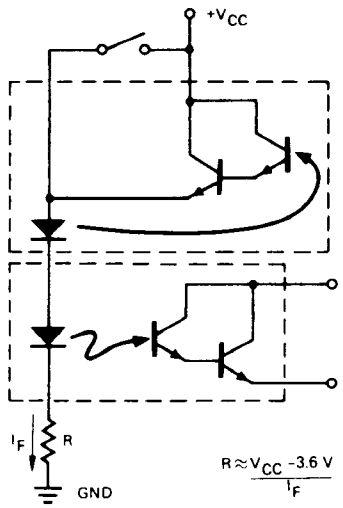

NOT APPLICABLE TO 4N31

T²L LOGIC ISOLATION

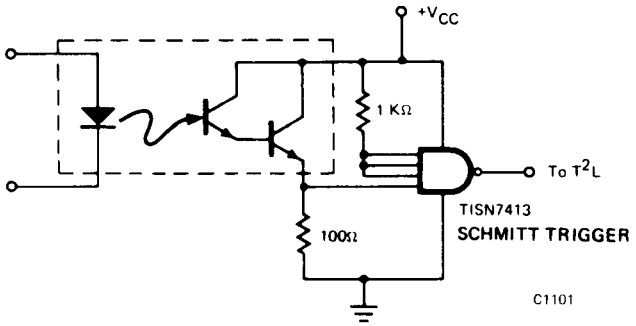

FORM C CONTACT

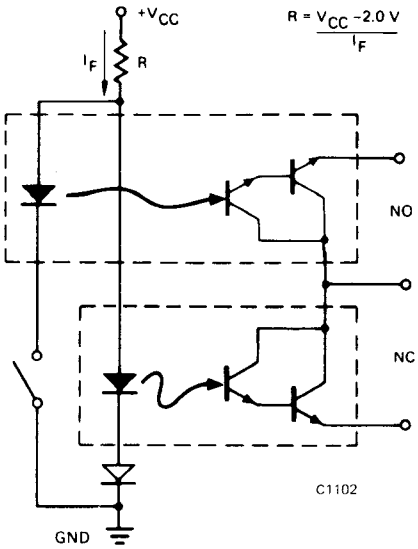

NOT APPLICABLE TO 4N31

TRIAC TRIGGER

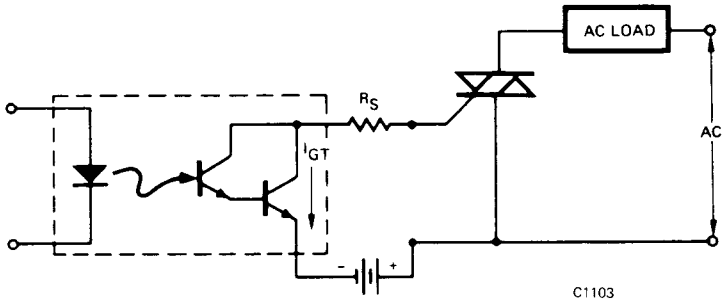

OPERATING A RELAY COIL

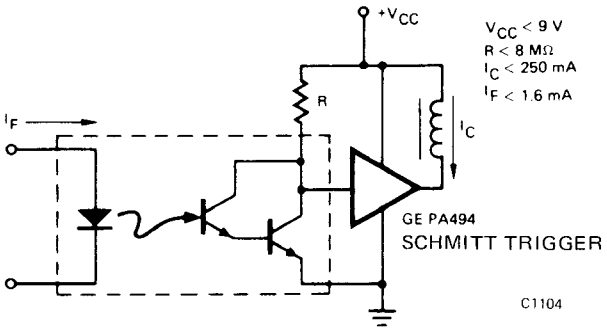

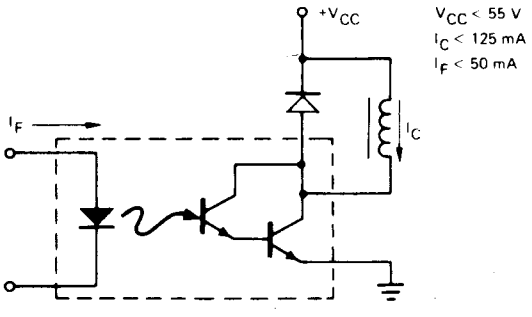

TYPICAL ELECTRO-OPTICAL CHARACTERISTIC CURVES

(25°C Free Air Temperature Unless Otherwise Specified)

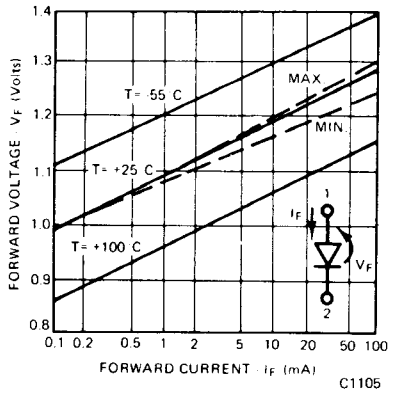

Fig. 1. Forward Voltage Drop vs. Forward Current

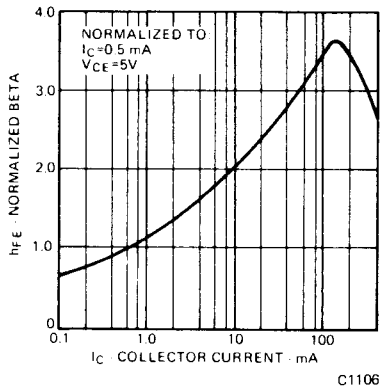

Fig. 2. Normalized Beta vs. Collector Current

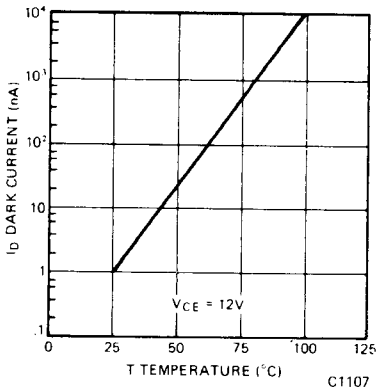

Fig. 3. Dark Current vs. Temperature

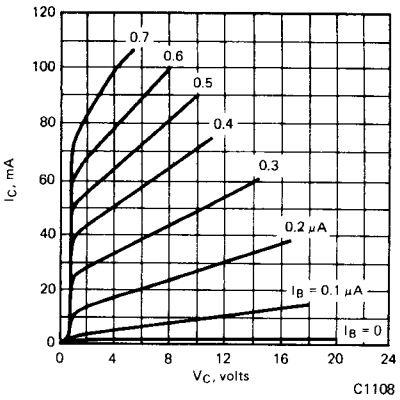

Fig. 4. Detector Standard Transfer Curves

NOTES

1. *The current transfer ratio (I_C/I_F) is the ratio of the detector collector current to the LED input current with V_{CE} at 10 volts.*
2. *The frequency at which i_C is 3dB down from the IKH_Z value.*
3. *Rise time (t_r) is the time required for the collector to increase from 10% of its final value, to 90%. Fall time (t_f) is the time required for the collector to decrease from 90% of its initial value to 10%.*

Monsanto / Electronic Special Products
3400 Hillview Avenue—Palo Alto, California 94304
(415) 493-3300—TWX (910) 373-1767