Monsanto

SOLID STATE LAMPS

ORANGE	MV5152
GREEN	MV5252
YELLOW	MV5352
IMPROVED RED	MV5752

PRODUCT DESCRIPTION

These solid state indicators offer high brightness and color availability. The orange, red, and yellow devices are made with gallium arsenide phosphide, and the green units are made with gallium phosphide. All are encapsulated in epoxy lenses.

PACKAGE DIMENSIONS

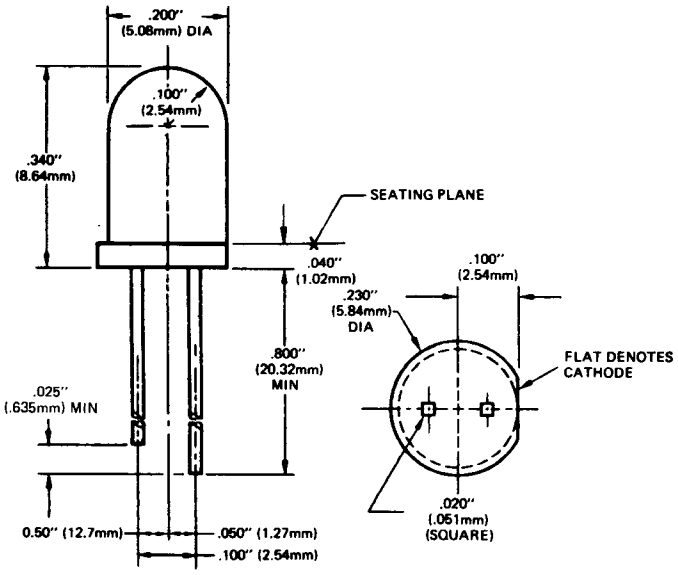

FEATURES

- Low cost
- Ultra high intensity light sources
- Orange, green, yellow, and red colors available. (See MV5050 series for other red sources.)
- Versatile mounting on P.C. board or panel
- Snap in clip available on request
- Long life—solid state reliability
- Low power requirements
- Compact, rugged, lightweight
- High efficiency

ABSOLUTE MAXIMUM RATINGS

Maximum power dissipation @ 25°C ambient	105 mW
Derate linearly from 25°C	1.14 mW/°C
Maximum storage temperature	−55°C to 100°C
Maximum operating temperature	−55°C to 100°C
Maximum lead solder time @ 230°C (see Note 3)	5 sec
Maximum currents and voltages	
Continuous forward current @ 25°C	35 mA
Continuous forward current @ 100°C	10 mA
Peak forward current (1 μsec pulse, 0.1% duty cycle)	5.0 A
Reverse voltage	5.0 V

PHYSICAL CHARACTERISTICS

TYPE	SOURCE COLOR	LENS COLOR	LENS EFFECT	POP-IN MOUNTING	CIRCUIT BOARD MOUNTING
MV5152	Orange	Clear orange	Narrow beam; point source	X	X
MV5252	Green	Clear green	Narrow beam; point source	X	X
MV5352	Yellow	Clear yellow	Narrow beam; point source	X	X
MV5752	Orange	Clear red	Narrow beam; point source	X	X

MV5152, MV5252, MV5352, MV5752

ELECTRO-OPTICAL CHARACTERISTICS

PARAMETER	TEST COND.	UNITS	MV5152	MV5252	MV5352	MV5752
Forward voltage (V_F)	20 mA	V				
Typ.			2.0	2.2	2.1	2.0
Max.			3.0	3.0	3.0	3.0
Luminous intensity (see Note 1)						
Typ.	20 mA	mcd	40.0	15.0	45.0	40.0
Peak wave length	20 mA	nm	635	565	585	635
Spectral line Half width	20 mA	nm	45	35	35	45
Capacitance						
Typ.	V = 0	pF	45	45	45	45
Reverse voltage (V_R)	I_R = 100 μA					
Min.		V	5	5	5	5
Typ.		V	25	25	25	25
Reverse current (I_R)	V_R = 5.0 V					
Max.		μA	100	100	100	100
Typ.		nA	20	20	20	20
Viewing angle (total)	See Fig. 3 & 4	degrees	28	28	28	28

TYPICAL ELECTRO-OPTICAL CHARACTERISTIC CURVES
(25°C Free Air Temperature Unless Otherwise Specified)

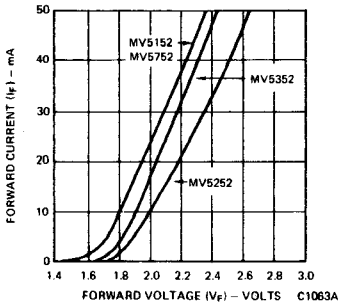

Fig. 1. Forward Current vs. Forward Voltage

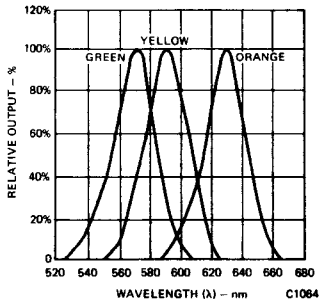

Fig. 2. Spectral Response

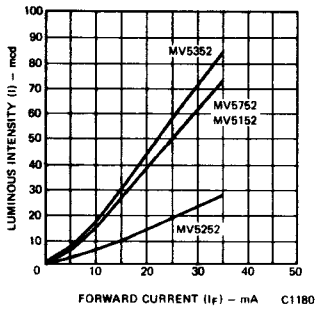

Fig. 3. Brightness vs. Forward Current

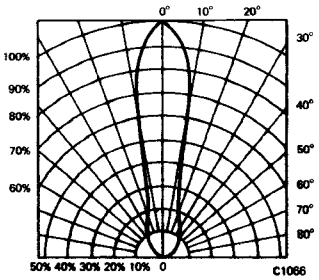

Fig. 4. Spatial Distribution (Note 2) (MV5352, MV5252, MV5152, MV5752)

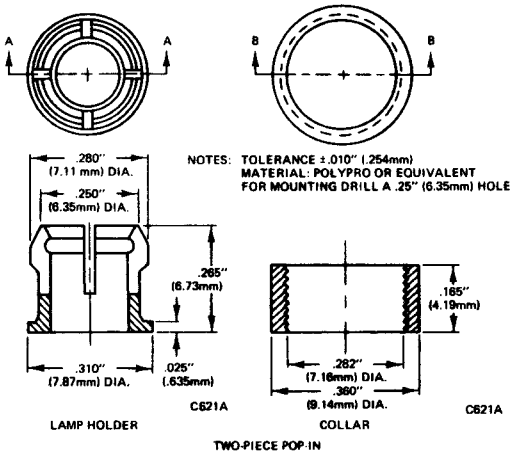

Fig. 5. Mounting Grommet (supplied on request only)

NOTES

1. *As measured with a Photo Research Corp. "SPECTRA" Microcandela Meter (S/N 1015).*
2. *The axes of spatial distribution are typically within a 10° cone with reference to the central axis of the device.*
3. *The leads of the device were immersed in molten solder, at 230°C, to a point 1/16 inch from the body of the device per MIL-S-750.*

Monsanto / Electronics Division
3400 Hillview Avenue · Palo Alto California 94304
(415) 493 3300 – TWX (910) 373 1767