Monsanto

0.560-INCH ORANGE HIGH PERFORMANCE DISPLAY

MAN6600 SERIES

DESCRIPTION

The MAN6600 Series is a family of large digits which can be mounted on 0.5-inch centers. The series features the sculptured font which minimizes "gappiness" at the segment intersections. The models available are two-digit, with right-hand decimal points and one and one-half digit, with polarity sign and right-hand decimal points. Both models are available in a common anode or common cathode configuration.

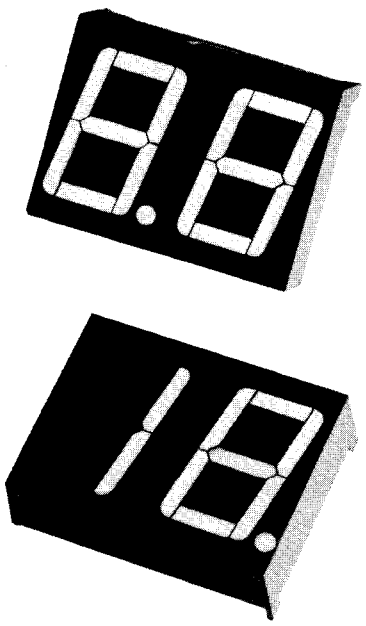

FEATURES

- High performance nitrogen-doped GaAsP on GaP.
- Large, easy to read, digits
- Common anode or common cathode models
- Also available in green, red and yellow
- Fast switching—excellent for multiplexing
- Low power consumption
- Bold solid segments that are highly legible
- Solid state reliability—long operation life
- Rugged plastic construction
- Directly compatible with integrated circuits
- High brightness with high contrast
- Wide angle viewing . . . 150°
- Standard double-dip lead configuration
- Low forward voltage
- Two-digit package simplifies alignment & assembly

For industrial and consumer applications such as:

- Digital readout displays
- Instrument panels
- Point-of-sale equipment
- Digital clocks
- TV and radios

MODEL NUMBERS

PART NO.	COLOR	DESCRIPTION	PACKAGE DRAWING	PIN-OUT SPECIFICATION
MAN6610	Orange	2 Digit; Common Anode; Rt. Hand Decimal	A	A
MAN6630	Orange	1½ Digit; Common Anode; Overflow ±1.8. Rt. Hand Decimal	B	B
MAN6640	Orange	2 Digit; Common Cathode; Rt. Hand Decimal	A	C
MAN6650	Orange	1½ Digit; Common Cathode; Overflow ±1.8. Rt. Hand Decimal	B	D

FILTER RECOMMENDATIONS

For optimum on and off contrast, one of the following filters or equivalents should be used over the display:

MAN6600 Series	Panelgraphic Scarlet 65 Homalite 100-1670

PACKAGE DIMENSIONS

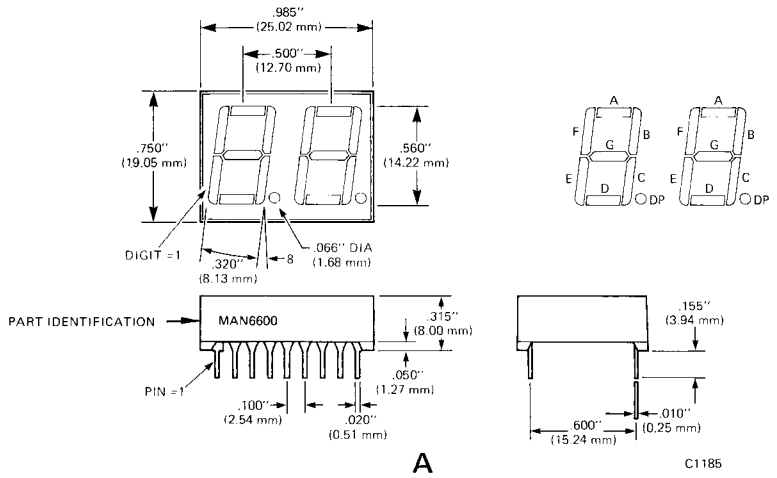

A

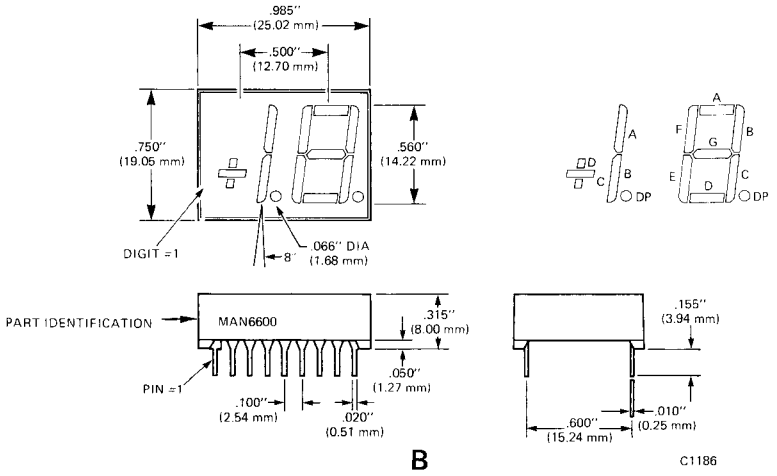

B

PIN CONNECTIONS

PIN NO.	ELECTRICAL CONNECTIONS			
	A MAN6610	B MAN6630	C MAN6640	D MAN6650
1	E cathode (No. 1)	C cathode (No. 1)	E anode (No. 1)	C anode (No. 1)
2	D cathode (No. 1)	D cathode (No. 1)	D anode (No. 1)	D anode (No. 1)
3	C cathode (No. 1)	B cathode (No. 1)	C anode (No. 1)	B anode (No. 1)
4	DP cathode (No. 1)	DP cathode (No. 1)	DP anode (No. 1)	DP anode (No. 1)
5	E cathode (No. 2)	E cathode (No. 2)	E anode (No. 2)	E anode (No. 2)
6	D cathode (No. 2)	D cathode (No. 2)	D anode (No. 2)	D anode (No. 2)
7	G cathode (No. 2)	G cathode (No. 2)	G anode (No. 2)	G anode (No. 2)
8	C cathode (No. 2)	C cathode (No. 2)	C anode (No. 2)	C anode (No. 2)
9	DP cathode (No. 2)	DP cathode (No. 2)	DP anode (No. 2)	DP anode (No. 2)
10	B cathode (No. 2)	B cathode (No. 2)	B anode (No. 2)	B anode (No. 2)
11	A cathode (No. 2)	A cathode (No. 2)	A anode (No. 2)	A anode (No. 2)
12	F cathode (No. 2)	F cathode (No. 2)	F anode (No. 2)	F anode (No. 2)
13	Digit No. 2 anode	Digit No. 2 anode	Digit No. 2 cathode	Digit No. 2 cathode
14	Digit No. 1 anode	Digit No. 1 anode	Digit No. 1 cathode	Digit No. 1 cathode
15	B cathode (No. 1)	A cathode (No. 1)	B anode (No. 1)	A anode (No. 1)
16	A cathode (No. 1)	No connection	A anode (No. 1)	No connection
17	G cathode (No. 1)	No connection	G anode (No. 1)	No connection
18	F cathode (No. 1)	No connection	F anode (No. 1)	No connection

ABSOLUTE MAXIMUM RATINGS

	MAN6610/6640	MAN6630/6650
Power dissipation @ 25°C ambient	800 mW	650 mW
Derate linearly from 25°C	−13 mW/°C	−11 mW/°C
Storage and operating temperature	−40°C to 85°C	−40°C to 85°C
Continuous forward current		
Total	320 mA	260 mA
Per segment	20 mA	20 mA
Decimal point	20 mA	20 mA
Reverse voltage		
Per segment	3.0 V	3.0 V
Decimal point	3.0 V	3.0 V
Solder time @ 260°C (see Note 3 & 4)	5 sec	5 sec

ELECTRICAL-OPTICAL CHARACTERISTICS (25°C Free Air Temperature Unless Otherwise Specified)

	MIN.	TYP.	MAX.	UNITS	TEST CONDITIONS
Luminous Intensity:					
Segment (see Note 1)	700	2000		μcd	I_F = 20 mA
	175	500		μcd	I_F = 5 mA
Decimal point (see Note 5)	300	600		μcd	I_F = 20 mA
Segment C or D of "+" (6630/6650)	300	600		μcd	I_F = 20 mA
Peak emission wavelength		630			
Spectral line half width		40			
Forward voltage					
Segment		2.0	2.5	V	I_F = 20 mA
Decimal point		2.0	2.5	V	I_F = 20 mA
Dynamic resistance					
Segment		26		Ω	I_F = 20 mA
Decimal point		26		Ω	I_F = 20 mA
Capacitance					
Segment		35		pF	V = 0
Decimal point		35		pF	V = 0
Reverse current					
Segment			100	μA	V_R = 3.0 V
Decimal point			100	μA	V_R = 3.0 V

TYPICAL THERMAL CHARACTERISTICS

Thermal resistance junction to free air Θ_{JA}	160°C/W
Wavelength temperature coefficient (case temp.)	1.0 Å/W
Forward voltage temperature coefficient	−2.0 mV/°C

NOTES

1. *As measured with a Photo Research Spectra Microcandela Meter corrected for wavelength error. Intensity will not vary more than ±33% between all segments.*
2. *The curve in Fig. 3 is normalized to the brightness at 25° C to indicate the relative efficiency over the operating temperature range.*
3. *Leads immersed to 1/16" from the body of the device. Maximum unit surface temperature is 140°C.*
4. *For flux removal, use Freon TF, Freon TE, Isoproponal, or water up to their boiling points.*
5. *Intensity adjusted for smaller areas of the "+" and decimal points.*

TYPICAL CURVES

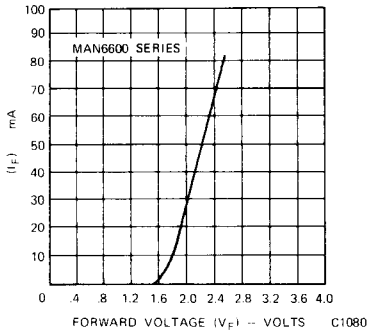

Fig. 1. Forward Current vs. Forward Voltage

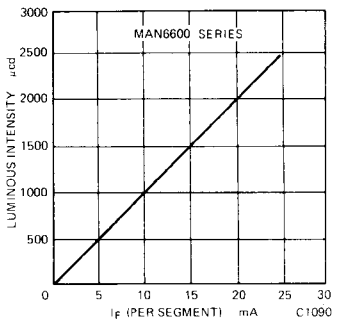

Fig. 2. Luminous Intensity vs. Forward Current

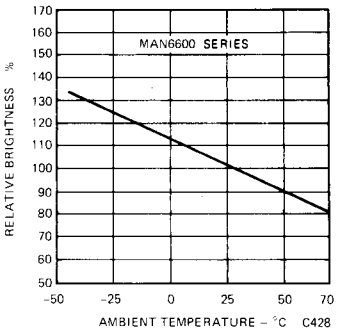

Fig. 3. Luminous Intensity vs. Temperature (see Note 2)

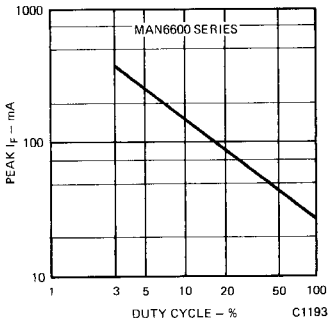

Fig. 4. Max Peak Current vs. Duty Cycle

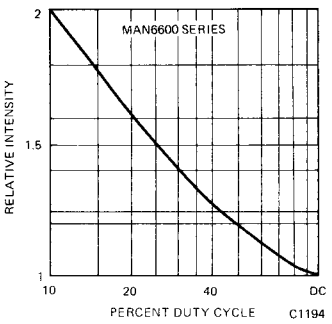

Fig. 5. Luminous Intensity vs. Duty Cycle

INTERNAL CONNECTIONS

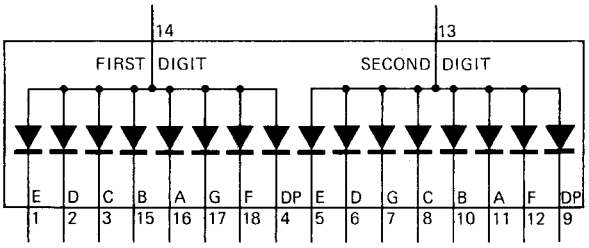

MAN6610 C1195

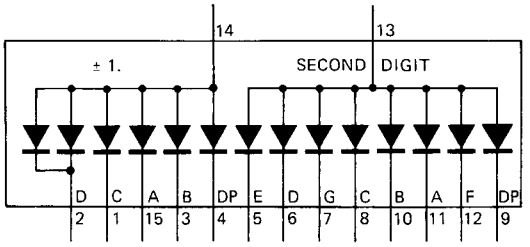

MAN6630 C1196

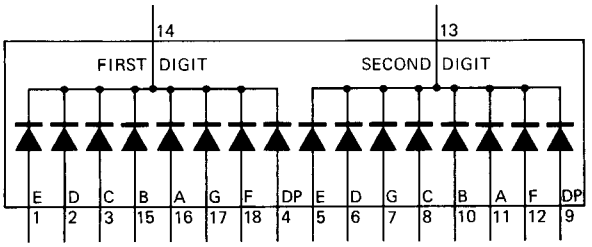

MAN6640 C1197

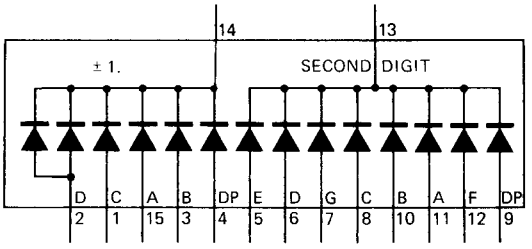

MAN6650 C1198

Monsanto / Electronics Division
3400 Hillview Avenue—Palo Alto, California 94304
(415) 493-3300—TWX (910) 373-1767

